How to install Zaptec Sense with P1 connectivity

Install Zaptec Sense with P1 connectivity, connect it to the electricity meter, set it up in the Zaptec app and troubleshoot common setup issues.

Use this guide to install and set up Zaptec Sense with a P1 port, also called an RJ12 port.

Zaptec Sense measures how much power your building is using and adjusts charging based on the available capacity. When the building uses more power, charging can slow down. When more capacity becomes available, charging can speed up again. This helps reduce the risk of overload, protect the main fuse and use the available power more efficiently.

If your electricity meter does not have a P1 port, use the guide for your connection type instead:

- How to install Zaptec Sense with HAN connectivity.
- How to install Zaptec Sense with RS485 Modbus and Ethernet connectivity.

Before you start

Check the P1 port

- Make sure the P1 port on the energy meter is enabled.
- Confirm that the meter supports the required communication protocol.
- If the P1 port is disabled or you are unsure about the configuration, contac
  grid company/utility.

Check the network connection

- Ensure there is a **stable Wi-Fi or Ethernet connection** where Zaptec Sense will be installed.
- The network must provide internet access and use **DHCP** (for automatic IP address assignment).

Check the meter protocol

Zaptec Sense with P1 connectivity depends on the communication protocol used by the grid operator. Even if two electricity meters have the same brand and model, they may be configured with **different protocols**, which affects compatibility.

If you complete the setup but do not get correct readings, the issue may be related to the energy meter type or protocol configuration. Refer to the meter's documentation or contact your electricity provider for confirmation.

What you need

- Zaptec Sense.
- Supplied custom Micro-USB cable.
- Smartphone with the **Zaptec app.**
- Wi-Fi connection for Zaptec Sense.

If the P1 port is already in use by another device, you can use a P1 splitter and connect a 5V DC power supply to the micro-USB port on Zaptec Sense.

Step 1: Connect Zaptec Sense to the electricity meter

Zaptec Sense with P1 connectivity uses the P1 port on the electricity meter.

1. Locate the P1 port (RJ12) on the energy meter.

2. Connect Zaptec Sense to the P1 port using the included RJ12 cable.
3. Wait at least three minutes.

When ready, the LED will blink orange.

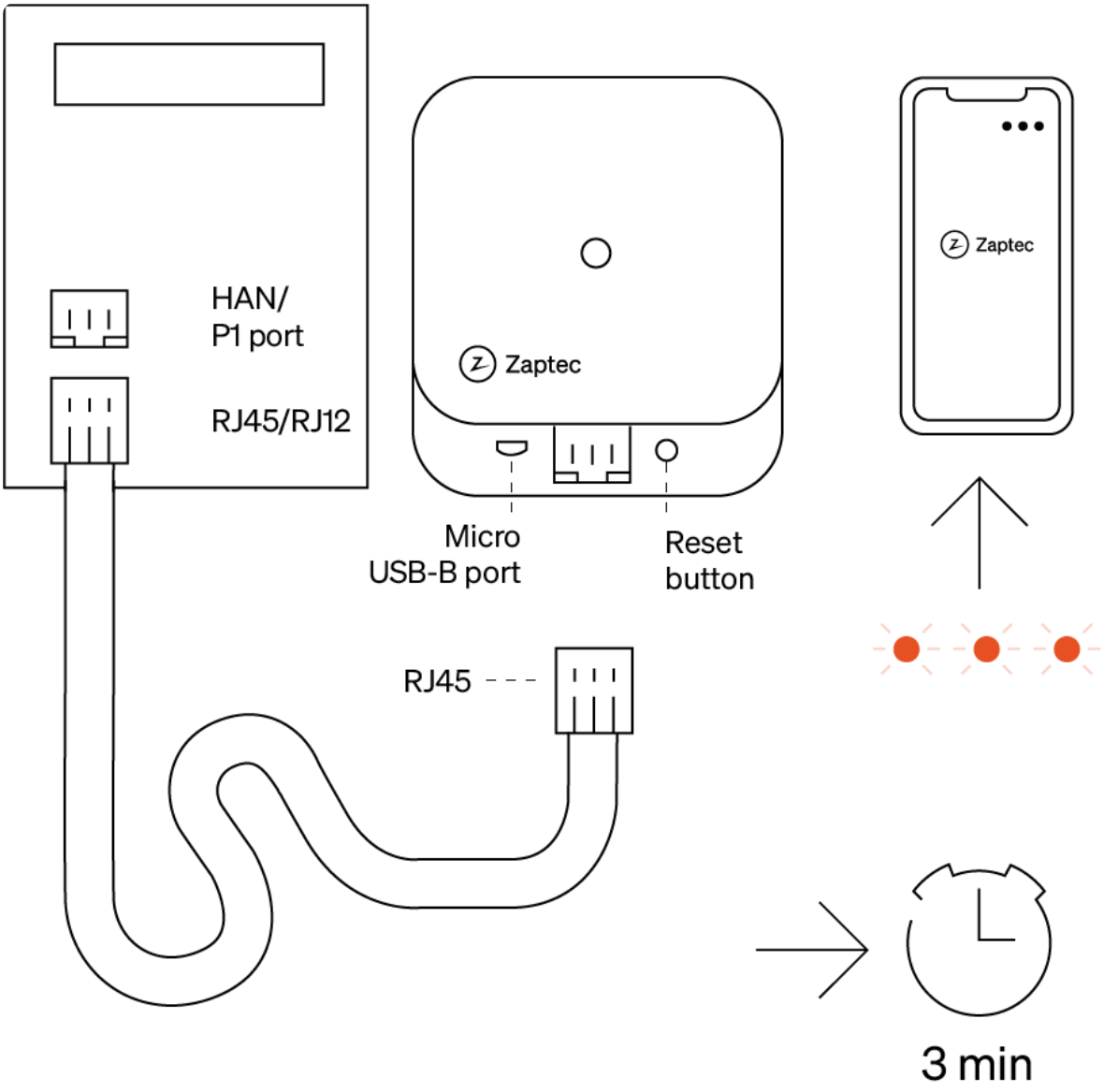

Step 2: Set up Zaptec Sense in the Zaptec app

Use the Zaptec app to register Zaptec Sense, connect it to the network and pair it with the Zaptec installation.

1. Open and log in to the **Zaptec app**.
2. In **Dashboard**, tap the three dots in the corner, select **Install product**.

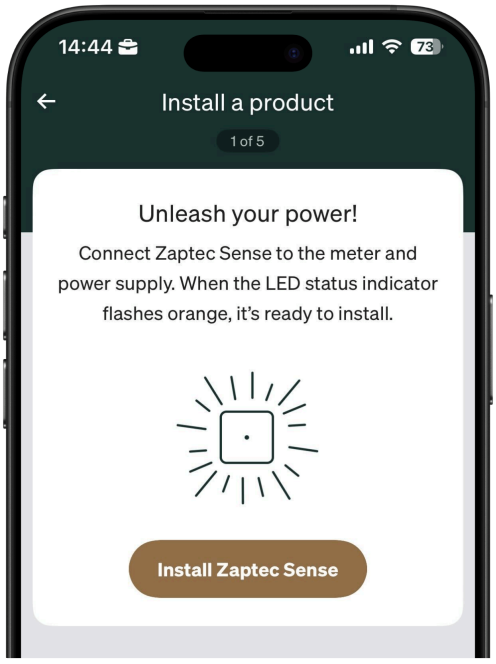

3. Scan the QR code on the device or in the manual.
4. Follow the instructions to connect to Wi-Fi, set the main fuse value, and to confirm meter connection.

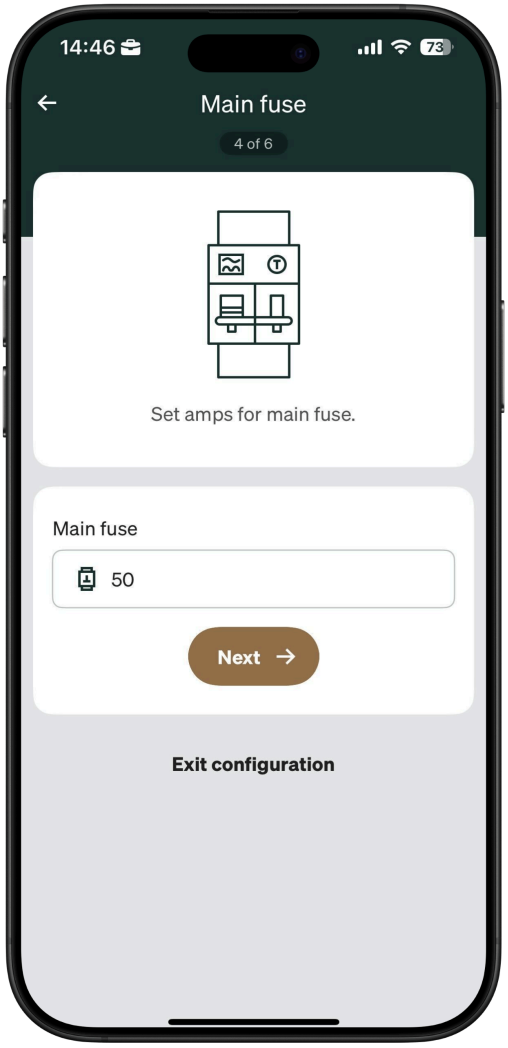

If this is the first setup for the installation:

1. Select **Pair with a charger**.
2. Enter the charging station serial number.
3. Complete the setup in the app.

When the LED turns solid white, Zaptec Sense is active and will appear under **Power management** in the app.

What to expect after installation

After Zaptec Sense is installed and connected, charging speed may change during the day.

This is normal.

For example:

- Charging may slow down when the building uses more power.
- Charging may increase again when more capacity becomes available.
- You do not need to adjust the charging speed manually each time the building's power use changes.

Zaptec Sense manages the available charging power automatically within the limits set for the installation.

Trouble setting up Zaptec Sense?

- *If Zaptec Sense is not found in the app:* Make sure Zaptec Sense has power and shows a light. Stand within **Bluetooth range** of the device. Then open the Zaptec App and try **Install product** again.

- *If the LED shows 2 orange blinks:* Zaptec Sense has not received an IP address. Check the Wi-Fi password (or Ethernet cable) and make sure the network uses **DHCP**.
- *If the LED shows solid orange:* Zaptec Sense has received an IP address, but it cannot connect to the cloud. Check that the network has internet access and that the firewall allows the device to reach the internet.
- *If the LED shows orange → white (loop):* Zaptec Sense is not receiving meter data. Make sure the **P1/HAN port is activated** on the energy meter. Check the RJ12 cable on both ends and check the connection to the Xemex module.
- *If the LED shows 3 orange blinks:* Zaptec Sense is not configured. Open the Zaptec App and complete setup (Wi-Fi or Ethernet).
- *If Zaptec Sense loses connection*, the charging current is automatically reduced to 6 A to prevent overload. The minimum charging current can be changed in Zaptec Portal. See, connect Zaptec Sense to network.

Documentation and manuals

For technical details, certificates and product documentation, see Zaptec Sense P1 documents and manuals.

Relaterte artikler

Zaptec Sense and electricity meter compatibility
Which e-meters work with Zaptec Sense

How to install Zaptec Sense with HAN connectivity
Install Zaptec Sense with HAN connectivity, connect it to the electricity meter, set it up in the Zaptec …

How to install Zaptec Sense with RS485 Modbus and Ethernet connectivity
Install Zaptec Sense with RS485 Modbus and Ethernet, configure the energy meter, pair it in the Zapte…

How to connect Zaptec Sense to Wi-Fi or Ethernet
Set up connectivity for Zaptec Sense, change network settings and troubleshoot connection problems.

How to pair Zaptec Sense with an installation
Learn how to pair Zaptec Sense with an installation in the Zaptec app during product setup.

System status Check current status

Need more help? Contact support

Powered by Atender